LISTA DE APLICACIONES - BUYERS GUIDE

182356

8 424073 189714

Qty: 300 Weight: 1.095

O.E.M.	MAKE
48413-360B0	SSANGYONG
48413-360D0	SSANGYONG

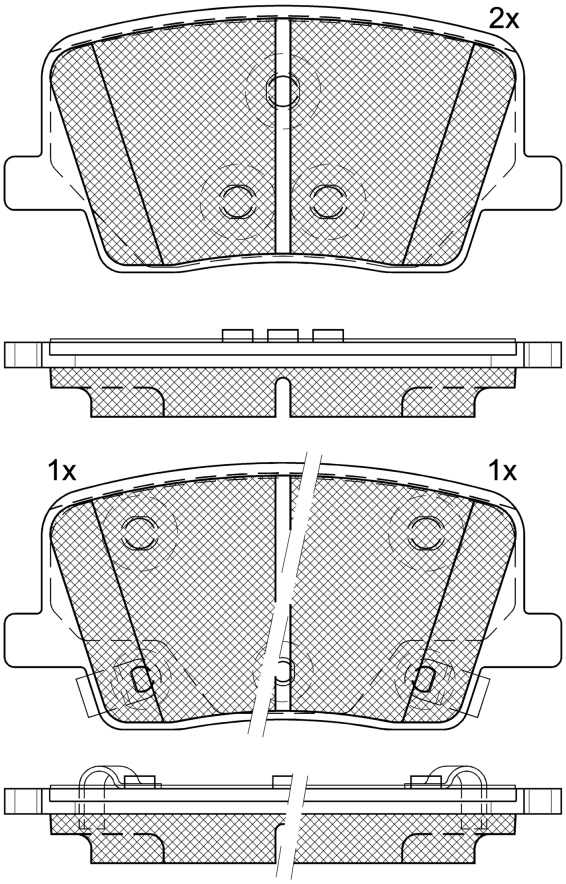

182356

E 9 90R-02A0111/5402

Advics

110.9x53.1x15.5

WVA
20782
20835
20947

MAKE
KG MOBILITY
SSANGYONG

			Trac.	CC	Kw	CV		Front / Rear
KG MOBILITY								
(POE) 11.23-								**SUV ()**
2.2 e-XDi 4WD		Diesel	4WD	2157	149	203	11.23-	■
SSANGYONG								
MUSSO II (QK) 01.18-								**Pickup (Executive SUV-J Segment)**
2.2 e-XDi 4WD (D22DTR)		Diesel	4WD	2157	133	181	01.18-	■
MUSSO GRAND 01.19-								**Pickup (Executive SUV-J Segment)**
2.2 e-XDi (D22DTR)		Diesel	RWD	2157	133	181	01.19-	■
2.2 e-XDi 4WD (D22DTR)		Diesel	4WD	2157	133	181	01.19-	■
REXTON II (Y400) 07.17-								**SUV Van (Executive SUV-J Segment)**
e-XDi		Diesel	RWD	2157	133	181	07.17-	■
e-XDi 4WD		Diesel	4WD	2157	133	181	07.17-	■
REXTON II (Y400, Y450) 07.17-								**SUV (Executive SUV-J Segment)**
2.0 (POX) (G20DTR)	Rigid Axle, Multilink Axle	Gasolina	RWD	1998	165	224	07.18-	■
2.0 A las 4 ruedas (POX) (G20DTR)	Rigid Axle, Multilink Axle	Gasolina	4WD	1998	165	224	07.18-	■
2.2 Xdi (POE) (D22DTR)	Rigid Axle, Multilink Axle	Diesel	RWD	2157	133	181	07.17-	■
2.2 Xdi A las 4 ruedas (POE) (D22DTR)	Rigid Axle, Multilink Axle	Diesel	4WD	2157	133	181	07.17-	■
2.2 Xdi		Diesel	RWD	2157	149	203	07.21-	■
2.2 Xdi A las 4 ruedas		Diesel	4WD	2157	149	203	07.21-	■