LISTA DE APLICACIONES - BUYERS GUIDE

31255-4689

8 424073 103888

Weight: 8.115

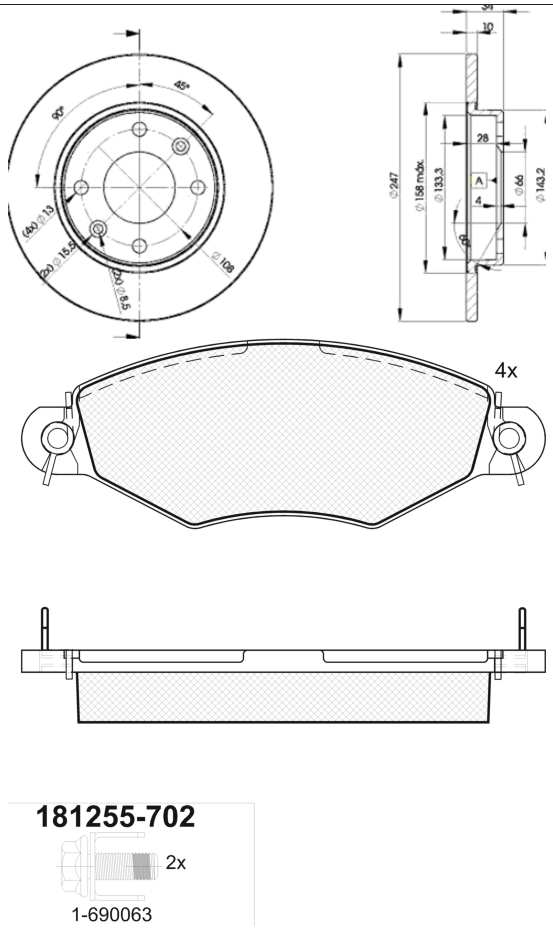

31255-4689

Bendix

130.7x47.25x18

Ø247x10x34

WVA
23205

MAKE
PEUGEOT

Trac.	CC	Kw	CV	Front / Rear

PEUGEOT

206 (2A/C) 08.98-								**Hatchback (Supermini car-B Segment)**
1.1 (HFY (TU1JP))		Gasolina	FWD	1124	40	54	08.98-07.00	■
1.1 (HFY (TU1JP))		Gasolina	FWD	1124	40	54	08.98-07.00	■
1.1 i (HFX (TU1JP))	-12/00	Gasolina	FWD	1124	44	60	09.98-02.07	■
1.1 i (HFX (TU1JP))	-12/00	Gasolina	FWD	1124	44	60	09.98-02.07	■
1.1 i (HFZ (TU1JP))	-12/00	Gasolina	FWD	1124	44	60	09.98-02.07	■
1.1 i (HFZ (TU1JP))	-12/00	Gasolina	FWD	1124	44	60	09.98-02.07	■
306 (7A, 7C, N3, N5) 01.93-10.03								**Hatchback (Compact car-C Segment)**
1.4 (KDX (TU3MC))	01/97-	Gasolina	FWD	1360	55	75	04.93-07.01	■
1.4 (KDX (TU3MC))	01/97-	Gasolina	FWD	1360	55	75	04.93-07.01	■
1.4 (KFW (TU3JP))	01/97-	Gasolina	FWD	1360	55	75	04.93-07.01	■
1.4 (KFW (TU3JP))	01/97-	Gasolina	FWD	1360	55	75	04.93-07.01	■
1.4 (KFX (TU3JP))	01/97-	Gasolina	FWD	1360	55	75	04.93-07.01	■
1.4 (KFX (TU3JP))	01/97-	Gasolina	FWD	1360	55	75	04.93-07.01	■
306 (7B, N3, N5) 04.93-10.03								**Saloon (Compact car-C Segment)**
1.4 SL (KDX (TU3MC))	01/97-	Gasolina	FWD	1360	55	75	06.94-05.01	■
1.4 SL (KDX (TU3MC))	01/97-	Gasolina	FWD	1360	55	75	06.94-05.01	■
1.4 SL (KFW (TU3JP))	01/97-	Gasolina	FWD	1360	55	75	06.94-05.01	■
1.4 SL (KFW (TU3JP))	01/97-	Gasolina	FWD	1360	55	75	06.94-05.01	■
1.4 SL (KFX (TU3JP))	01/97-	Gasolina	FWD	1360	55	75	06.94-05.01	■
1.4 SL (KFX (TU3JP))	01/97-	Gasolina	FWD	1360	55	75	06.94-05.01	■